EACRM SERIES - EXTRUDED ALUMINUM RUNNING MAN COMBO

Architectural Grade Universal Extruded Aluminum Exit & Emergency Lighting Combination

FEATURES & SPECIFICATIONS

TYPICAL SPECIFICATION

Supply and install the **EACRM Series** extruded aluminum Running Man and Battery combination unit. The sign shall operate with universal 120 to 347 VAC input and provide a minimum of 120 minutes of emergency illumination for both the sign and the two integrated LED heads upon AC failure. The unit shall consist of two high-performance LED lampheads delivering a total of 250 lumens. The unit shall be field-configurable for single or double-face applications and suitable for wall or end mount. The unit shall be **CSA C22.2 No. 141-15 certified and C860 listed.**

CONSTRUCTION

- **Material:** Lightweight, high-strength extruded aluminum housing.
- **Design:** Attractive, architectural-grade construction that comes fully assembled with two screws for fast installation.
- **Heads:** Two fully adjustable, high-performance LED heads.
  Ambient Temperature: Rated for damp locations at (0°C to 50°C/32°F to 122°F).

Energy Verified

LISTED E539913

DAMP LOCATION

ELECTRICAL

- **Input:** Universal 120-347Vac, 50/60Hz.
- **Efficiency:** Highly efficient energy consumption (2.3W) with a fully automatic, current-limiting charger to maximize battery life.
- **Protection:** Integrated short-circuit protection and regulated charge voltage to ensure stable performance across varying line voltages.
- **Advanced Safety:** Filtered charger input minimizes charge voltage ripple; prevents over/undercharging to extend battery life.
- **Battery:** 3.6V AA 900mAh long-life, maintenance-free, rechargeable NiCd battery.

INSTALLATION & CONFIGURATION

- **Universal Mounting:** Supports End or Wall (Back) mounting with the included canopy.
- **Pendant Capable:** Designed with pendant mount capability for specialized architectural layouts.
- **All-In-One Kit:** Shipped as a Universal All-In-One Package containing:
  - One (1) backplate for single or double-face conversion.
  - Three (3) high-quality pictogram inserts: One (1) No Arrow and Two (2) Reversible Arrows.
  - Universal mounting canopy included.

No arrow x1 Right x1 Left x1

LISTINGS & COMPLIANCE

- **Performance:** C860 listed for energy efficiency.
- **Canadian Standards:** Listed and labeled to comply with **CSA C22.2 No. 141-15.**

PARAMETERS:

MODEL NO:	Input Ratings				Emergency Output:		Emergency Run Time	Recharge Time	Battery Pack	Operation Ambient
EACRM	120-347Vac	50/60Hz	0.033-0.015 Amps	2.3Watts	3.6Vdc	3.5Watts max	120Minutes	24Hours	NiCd 3.6V AA900mAh	0-50℃ damp locations

Note: EACRM is a **Universal All-In-One SKU**. The package includes all necessary components, including multiple panels and mounting hardware, to satisfy any architectural application in a single box.

PRODUCT DIMENSIONS:

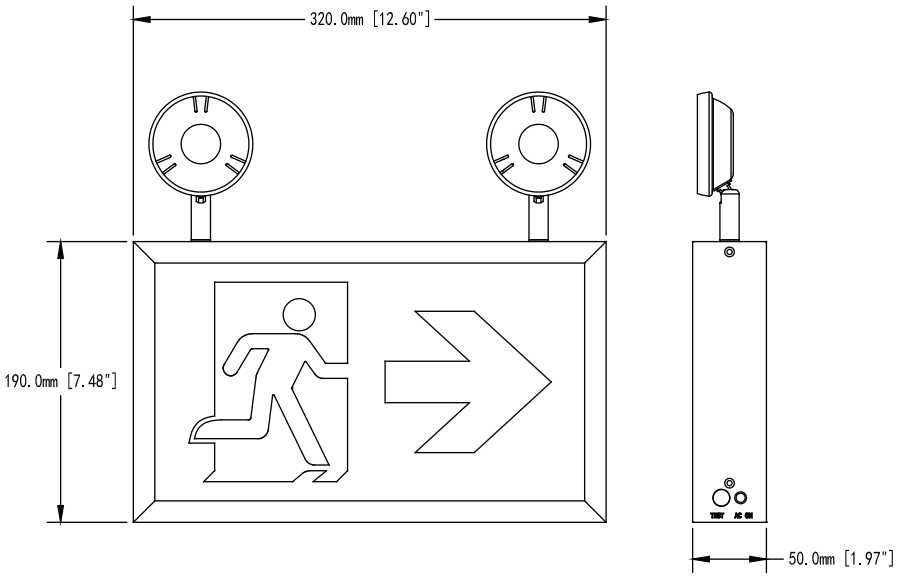

WIRING DIAGRAM:

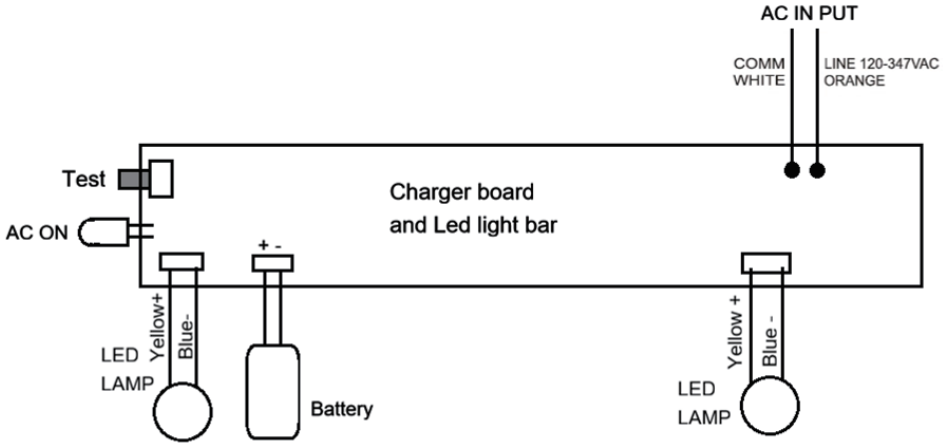

IMPORTANT OPERATION NOTE:

Initial Charge: The internal battery may not be fully charged upon delivery. After AC power is connected, allow the unit to charge for at least **24 hours** before initial testing or normal operation. Only use manufacturer-specified LED lamps for replacement to avoid transformer damage.