EARM SERIES - EXTRUDED ALUMINUM RUNNING MAN SIGN

Architectural Grade Universal Extruded Aluminum Exit Sign

FEATURES & SPECIFICATIONS

TYPICAL SPECIFICATION

Supply and install the **EARM Series** extruded aluminum Running Man Exit Signs. The sign shall operate with universal 120 to 347 VAC input and provide a minimum of 120 minutes of emergency illumination upon AC failure. The face shall be illuminated by an ultra-bright LED light source mounted on printed circuit boards, providing uniform illumination without shadows. The unit shall be field-configurable for single or double-face applications and suitable for wall, end, ceiling or pendant mount. The sign shall be **CSA C22.2 No.141-15 certified and C860 listed.**

Energy Verified

LISTED E539913

DAMP LOCATION

CONSTRUCTION

- **Material:** Lightweight, high-strength extruded aluminum housing.
- **Design:** Attractive, durable construction that comes fully assembled with two screws for fast installation.
- **Ambient Temperature:** Rated for damp locations at (0°C to 50°C/32°F to 122°F).

ELECTRICAL

- **Input:** Universal 120-347Vac, 50/60Hz.
- **Efficiency:** Ultra-low power consumption (1.9W) with a current-limiting charger to maximize battery life.
- **Protection:** Integrated short-circuit protection and regulated charge voltage to maintain stability over a wide range of line voltages.
- **Advanced Safety:** Filtered charger input minimizes voltage ripple; prevents over/undercharging to extend battery life.
- **Battery:** 3.6V AA 500mAh long-life, maintenance-free, rechargeable NiCd battery.

INSTALLATION & CONFIGURATION

- **Universal Mounting:** Supports End or Wall (Back) mounting with the included canopy.
- **Pendant Capable:** Designed with pendant mount capability for specialized architectural layouts.
- **All-In-One Kit:** Shipped as a Universal All-In-One Package containing:
  - One (1) backplate for single or double-face conversion.
  - Three (3) high-quality pictogram inserts: One (1) No Arrow and Two (2) Reversible Arrows.
  - Universal mounting canopy included.

No arrow x1 Right x1 Left x1

LISTINGS & COMPLIANCE

- **Performance:** C860 listed for energy efficiency.
- **Canadian Standards:** Listed and labeled to comply with **CSA C22.2 No. 141-15.**

PARAMETERS:

MODEL NO:	Input Ratings				Emergency Output:		Emergency Run Time	Recharge Time	Battery Pack	Operation Ambient
EARM	120-347Vac	50/60Hz	0.030-0.013 Amps	1.9Watts	3.6Vdc	0.5Watts max	120Minutes	24Hours	NiCd 3.6V AA500mAh	0-50 ℃ damp locations

Note: EARM is a **Universal All-In-One SKU**. The package includes multiple panel options and a canopy to satisfy all directional and mounting requirements in a single box.

PRODUCT DIMENSIONS:

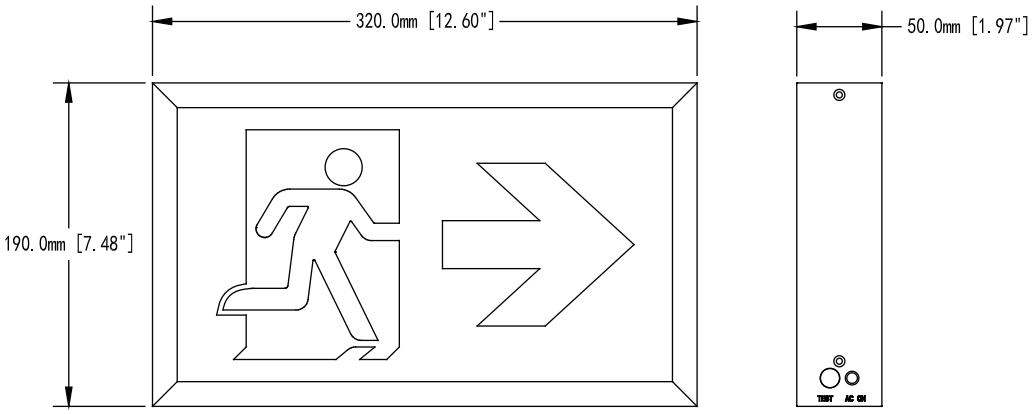

WIRING DIAGRAM:

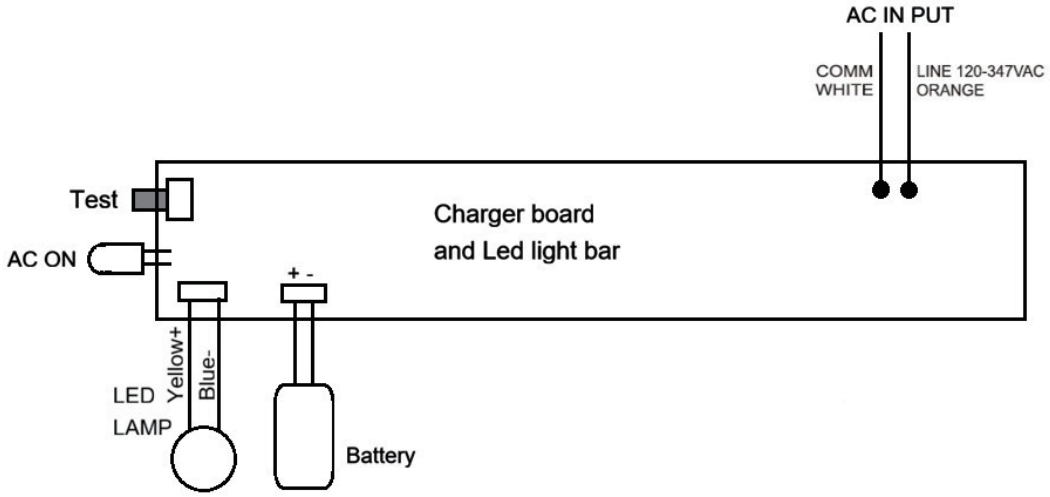

IMPORTANT OPERATION NOTE:

Initial Charge: The internal battery may not be fully charged upon delivery. After AC power is connected, allow the unit to charge for at least 24 hours before initial testing or normal operation. LED lamp typical life is 5 years based on 24/7 operation.