PCRMLP SERIES - LED COMBO RUNNING MAN

Commercial-Grade Universal Thermoplastic Exit & Emergency Lighting Combination

FEATURES & SPECIFICATIONS

Supply and install the **PCRMLP** Series high-impact thermoplastic Running Man and Battery combination unit. The sign shall operate with universal 120 to 347 VAC input and provide a minimum of 120 minutes of emergency illumination for both the sign and the two integrated LED heads upon AC failure. The unit shall consist of two fully adjustable 1.5W LED heads providing a total of 250 lumens. The sign shall be field-configurable for single or double-face applications and be suitable for wall or ceiling mount. The unit shall be **CSA C22.2 No. 141-15 certified and C860 listed.**

Energy Verified

c UL us LISTED E539913

DAMP LOCATION

CONSTRUCTION

- **Material:** Injection-molded, engineering-grade 5VA flame-retardant, high-impact thermoplastic.
- **Design:** Lightweight and durable, featuring quick-snap faceplates for rapid maintenance.
- **Ambient Temperature:** Rated for damp locations at (0°C to 50°C/32°F to 122°F).

ELECTRICAL

- **Input:** Universal 120-347Vac, 50/60Hz.
- **Efficiency:** Low energy consumption (3.5W) with a fully automatic, current-limiting charger.
- **Protection:** Integrated short-circuit and brownout protection with regulated charge voltage to maximize battery longevity.
- **Safety Safety:** Includes a push-button test switch and diagnostic LED for AC ON status.
- **Battery:** 3.6V AA 900mAh long-life, maintenance-free, rechargeable NiCd battery.

INSTALLATION & CONFIGURATION

No arrow x1 Right x1 Left x1

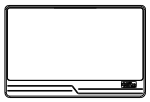

Faceplates x2

- **Universal Mounting:** Supports Ceiling (Top) or Wall (Back) mounting with the included canopy.
- **Pendant Capable:** Designed with pendant mount capability for specialized architectural layouts.
- **All-In-One Kit:** Shipped as a Universal All-In-One Package containing:
  - **Two (2)** faceplates and one (1) backplate for single or double-face conversion.
  - **Three (3) high-quality pictogram inserts:** One (1) No Arrow and Two (2) Reversible Arrows.
  - Universal mounting canopy included.

LISTINGS & COMPLIANCE

- **Performance:** C860 listed for energy efficiency.
- **Canadian Standards:** Listed and labeled to comply with **CSA C22.2 No. 141-15.**

PARAMETERS:

MODEL NO:	Input Ratings				Emergency Output:		Emergency Run Time	Recharge Time	Battery Pack	Operation Ambient
PCRMLP	120-347Vac	50/60Hz	0.033-0.015 Amps	2.3Watts	3.6Vdc	3.5Watts	120Minutes	24Hours	NiCd 3.6V AA900mAh	0-50℃ damp locations

Note: PCRMLP is a Universal All-In-One SKU. Each unit is complete with all necessary components for single/double-face and multiple mounting configuration

PRODUCT DIMENSIONS:

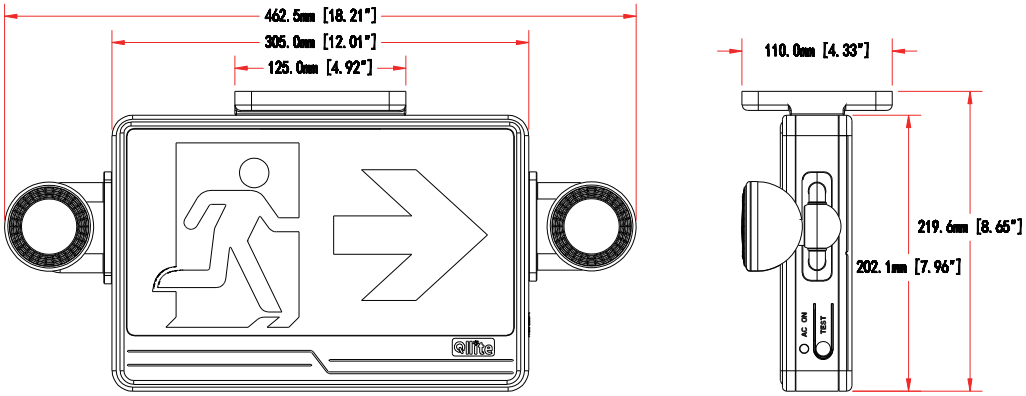

WIRING DIAGRAM:

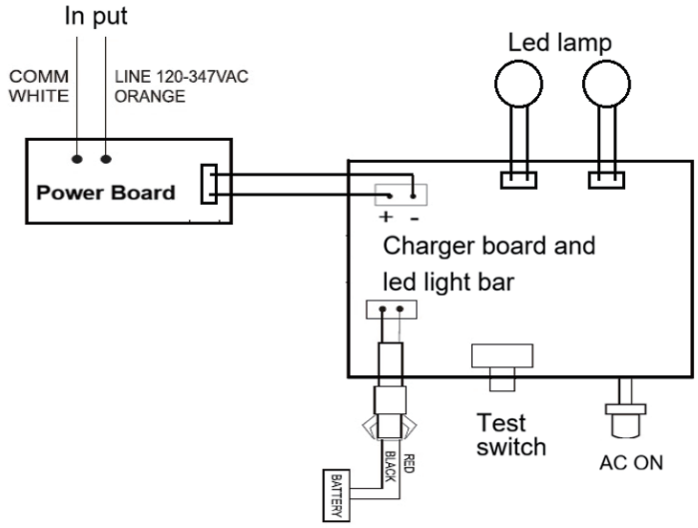

IMPORTANT OPERATION NOTE:

Initial Charge: The internal battery may not be fully charged upon delivery. After AC power is connected, allow the unit to charge for at least **24 hours** before initial testing or normal operation. Only use manufacturer-specified LED lamps for replacement to avoid transformer damage.