PRM SERIES - LED RUNNING MAN EXIT SIGN

Commercial-Grade Universal Thermoplastic Exit Sign

FEATURES & SPECIFICATIONS

TYPICAL SPECIFICATION

Supply and install the **PRM Series** high-impact thermoplastic Running Man Exit Signs. The sign shall operate with universal 120 to 347 VAC input and provide a minimum of 120 minutes of emergency illumination upon AC failure. The face shall be illuminated by an ultra-bright LED light source. The unit shall be field-configurable for single or double-face applications and suitable for wall, end, or ceiling mount. The sign shall be **CSA C22.2 No.141-15 certified, C860 listed**, and ICES-005 compliant.

Energy Verified

LISTED E539913

DAMP LOCATION

CONSTRUCTION

- **Material:** Precision injection-molded, engineering-grade thermoplastic.
- **Durability:** 5VA flame-retardant, high-impact resistant housing in white finish.
- **Compliance:** Fully RoHS compliant and UL Listed for damp locations.

ELECTRICAL

- **Input:** Universal 120-347Vac, 50/60Hz.
- **Efficiency:** Ultra-low power consumption (1.9W) with a current-limiting charger to minimize operating costs.
- **Protection:** Integrated short-circuit protection and regulated charge voltage to ensure stable performance across varying line voltages.
- **Battery Safety:** Features AC Reset and Low Voltage Disconnect (LVD) to prevent deep discharge damage.
- **Battery Type:** 3.6V AA 500mAh long-life, maintenance-free, rechargeable NiCd battery.

INSTALLATION & CONFIGURATION

- **Universal Mounting:** Surface mount via a snap-fit "easy-connect" backplate that fits standard junction boxes.
- **Versatility:** Suitable for Ceiling (Top), End or Wall (Back) mounting.
- **All-In-One Kit:** Shipped as a Universal All-In-One Package containing:
  - **Two (2)** faceplates and one (1) backplate for single or double-face conversion.
  - **Three (3) high-quality pictogram inserts:** One (1) No Arrow and Two (2) Reversible Arrows.
  - Universal mounting canopy included.

No arrow x1 Right x1 Left x1

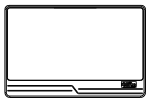

Faceplates x2

LISTINGS & COMPLIANCE

- **Certifications:** UL damp location listed (0°C to 50°C/32°F to 122°F).
- **Performance:** C860 listed for energy efficiency.
- **Canadian Standards:** Listed and labeled to comply with **CSA C22.2 No.141-15.**

PARAMETERS:

MODEL NO:	Input Ratings				Emergency Output:		Emergency Run Time	Recharge Time	Battery Pack	Operation Ambient
PRM	120-347Vac	50/60Hz	0.030-0.013 Amps	1.9Watts	3.6Vdc	0.5Watts max	120Minutes	24Hours	NiCd 3.6V AA500mAh	0-50℃ damp locations

Note: PRM Universal All-In-One SKU. Each unit is complete with all necessary components for single/double-face and multiple mounting configurations. No additional kits or parts required.

PRODUCT DIMENSIONS:

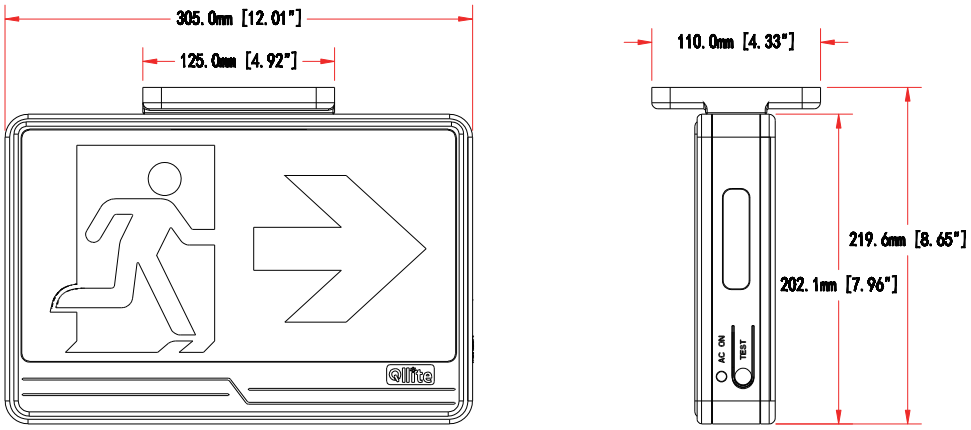

WIRING DIAGRAM:

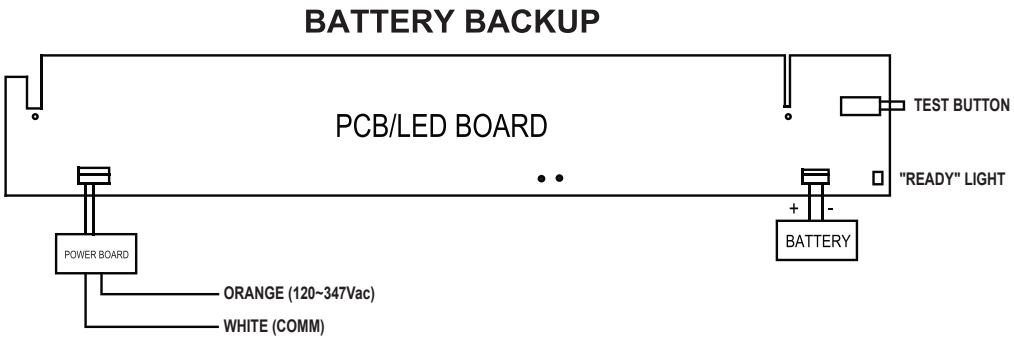

IMPORTANT OPERATION NOTE:

Initial Charge: The internal battery may not be fully charged upon delivery. After AC power is connected, allow the unit to charge for at least 24 hours before initial testing or normal operation. Only use manufacturer-specified LED lamps for replacement to avoid transformer damage.