SCRM SERIES - STEEL COMBO RUNNING MAN

Heavy-Duty Universal 20-Gauge Steel Exit & Emergency Lighting Combination

FEATURES & SPECIFICATIONS

TYPICAL SPECIFICATION

Supply and install the **SCRM** Series heavy-duty 20-gauge steel Running Man and Battery combination unit. The sign shall operate with universal 120 to 347 VAC input and provide a minimum of 120 minutes of emergency illumination for both the sign and the two integrated LED heads upon AC failure. The unit shall consist of two high-performance LED lampheads providing a total of 250 lumens. The unit shall be field-configurable for single or double-face applications and suitable for wall or end mount. The unit shall be **CSA C22.2 No. 141-15** certified and C860 listed.

Energy Verified

LISTED E539913

DAMP LOCATION

CONSTRUCTION

- **Material:** Heavy-duty 20-gauge steel housing with a white powder coat finish.
- **Design:** Features a universal J-box mounting pattern and interchangeable faceplates for easy installation and maintenance.
- **Heads:** Two fully adjustable, high-performance LED heads.
- **Ambient Temperature:** Rated for damp locations at (0°C to 50°C/32°F to 122°F).

ELECTRICAL

- **Input:** Universal 120-347Vac, 50/60Hz.
- **Efficiency:** Highly efficient energy consumption (2.3W) with a fully automatic, current-limiting charger.
- **Protection:** Integrated short-circuit protection and regulated charge voltage to ensure stable performance and maximize battery life.
- **Advanced Safety:** Filtered charger input minimizes charge voltage ripple and prevents over/undercharging.
- **Battery:** 3.6V AA 900mAh long-life, maintenance-free, rechargeable NiCd battery.

INSTALLATION & CONFIGURATION

- **Universal Mounting:** Supports End or Wall (Back) mounting with the included canopy.
- **Pendant Capable:** Designed with pendant mount capability for industrial or high-ceiling layouts.
- **All-In-One Kit:** Shipped as a Universal All-In-One Package containing:
  - **Two (2)** faceplates and one (1) backplate for single or double-face conversion.
  - **Three (3) high-quality pictogram inserts:** One (1) No Arrow and Two (2) Reversible Arrows.
  - Universal mounting canopy included.

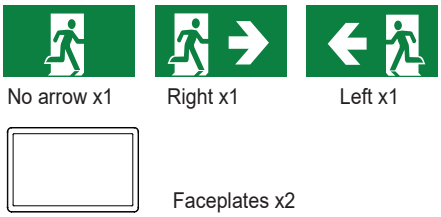

LISTINGS & COMPLIANCE

- **Performance:** C860 listed for energy efficiency.
- **Canadian Standards:** Listed and labeled to comply with **CSA C22.2 No. 141-15.**

PARAMETERS:

MODEL NO:	Input Ratings				Emergency Output:		Emergency Run Time	Recharge Time	Battery Pack	Operation Ambient
SCRM	120-347Vac	50/60Hz	0.033-0.015 Amps	2.3Watts	3.6Vdc	3.5Watts max	120Minutes	24Hours	NiCd 3.6V AA900mAh	0-50℃ damp locations

Note: SCRM is a Universal All-In-One SKU. The package includes all necessary components, including multiple panels and mounting hardware, to satisfy any commercial or industrial application in a single box.

PRODUCT DIMENSIONS:

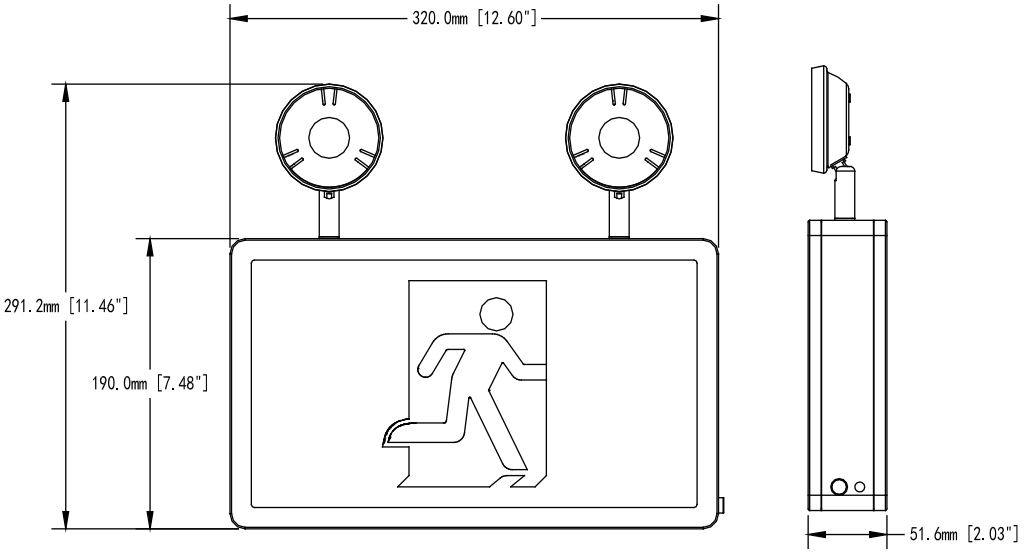

WIRING DIAGRAM:

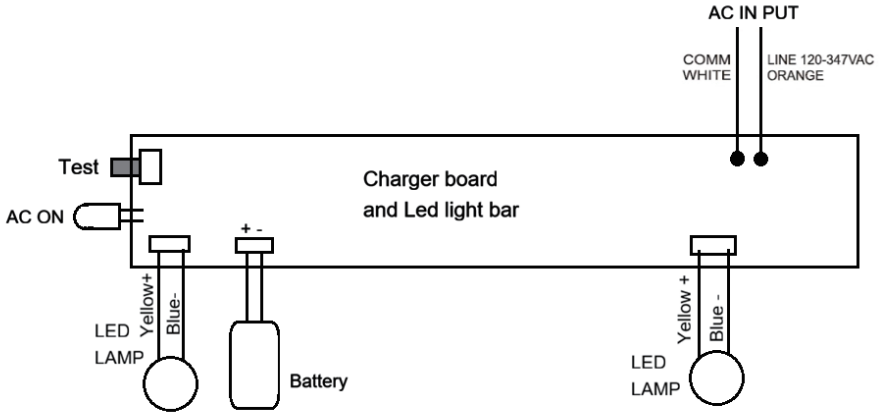

IMPORTANT OPERATION NOTE:

Initial Charge: The internal battery may not be fully charged upon delivery. After AC power is connected, allow the unit to charge for at least **24 hours** before initial testing or normal operation. Only use manufacturer-specified LED lamps for replacement to avoid transformer damage.